25 251 DA1 **ESSENCE 4-HOLE BATH COMBINATION**

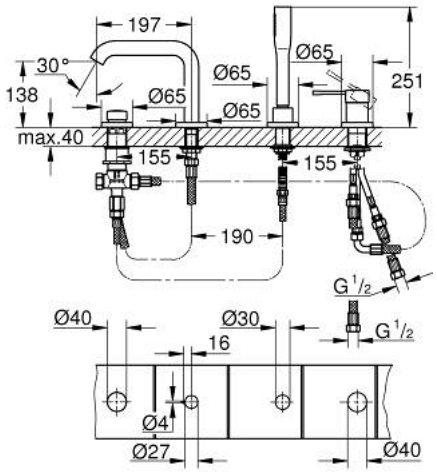

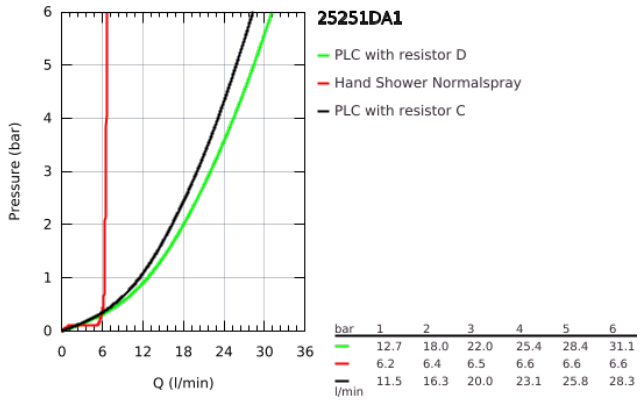

PRODUCT DESCRIPTION

- Colour: warm sunset
- GROHE SilkMove 35 mm ceramic cartridge
- with temperature limiter
- GROHE LongLife finish
- consisting of:
- pre-assembled spout fixing
- single lever mixer operating element
- metal lever
- bath inlet with mousseur
- diverter bath/shower
- metal stick hand shower
- metal shower hose 2000 mm (always chrome for any colour of the set)
- flexible connection hoses
- connection for shower hose
- protected against backflow
- for use with 29 037
- minimum pressure 1.0 bar
- professional edition