# 10 533 524 30 **GROHE CUBEO CONCEALED SHOWER SYSTEM WITH TEMPESTA 110**

**PRODUCT DESCRIPTION**

- Colour: matte black
- consisting of:
- trim set for GROHE Rapido SmartBox (35 600/35 604)
- concealed single-lever shower mixer (101 777)
- Tempesta Cube 110 shower rail set (26 748)
- shower outlet elbow
- without roughing-in set 35 600/35 604 (please order separately)

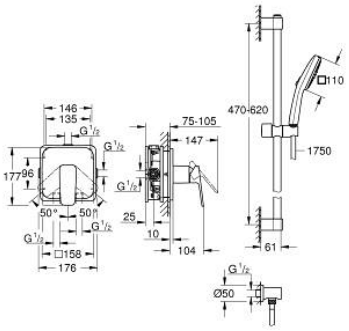


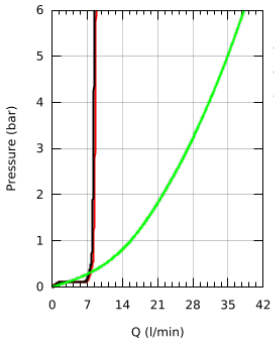


| bar | 1 | 2 | 3 | 4 | 5 | 6 |
|---|---|---|---|---|---|---|
| | 8.1 | 8.4 | 8.5 | 8.6 | 8.6 | 8.7 |
| | 7.8 | 8.1 | 8.2 | 8.3 | 8.3 | 8.4 |
| l/min | 15.6 | 22.0 | 27.0 | 31.2 | 34.9 | 38.2 |