10 533 424 30 GROHE CUBEO CONCEALED SHOWER SYSTEM WITH TEMPESTA 250

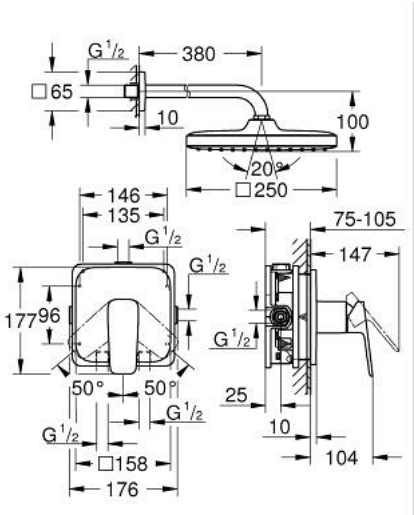

وصفُ المنتجَ

• اللونُ: Matte Black

• :يتألف مما يلي

• trim set for GROHE Rapido SmartBox (35 600/35 604)

• concealed single-lever shower mixer (101 777)

Tempesta 250 Cube head shower set 9.5 l/min (26 687) including

• horizontal shower arm 380 mm

• without roughing-in set 35 600/35 604 (please order separately)